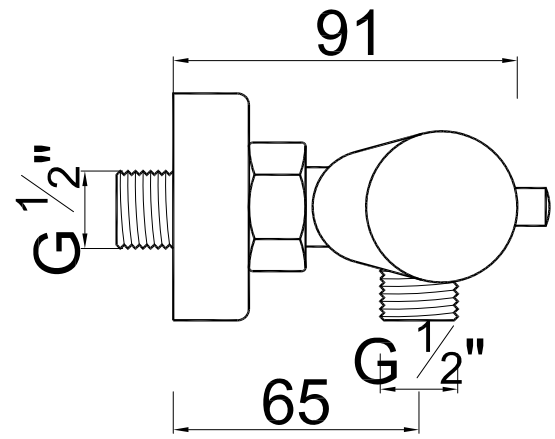
91
G 1/2"
G 1/2"
65

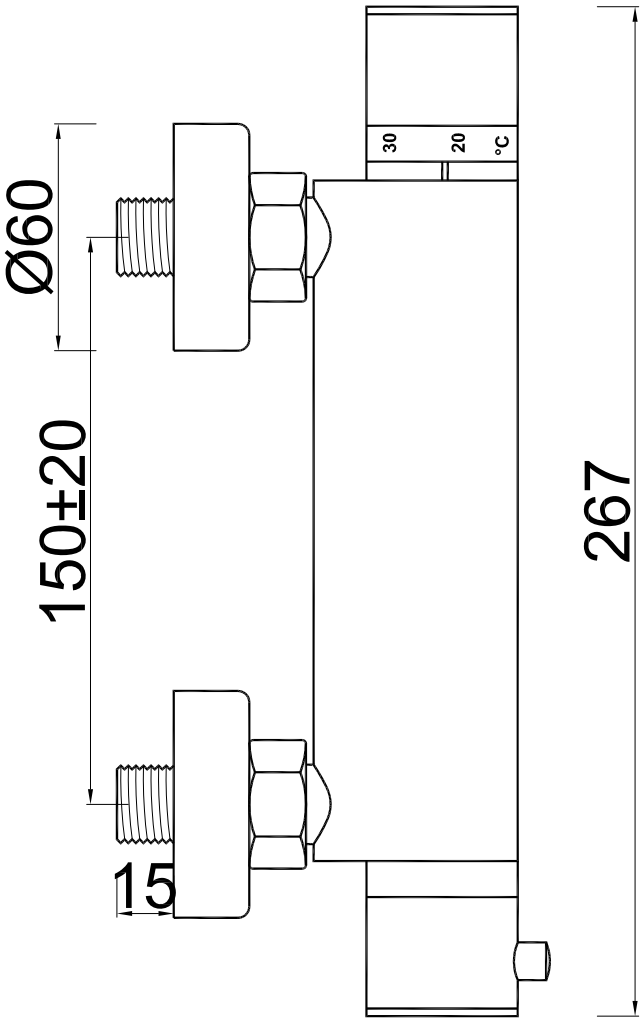
30
20
°C
Ø60
150±20
15
267

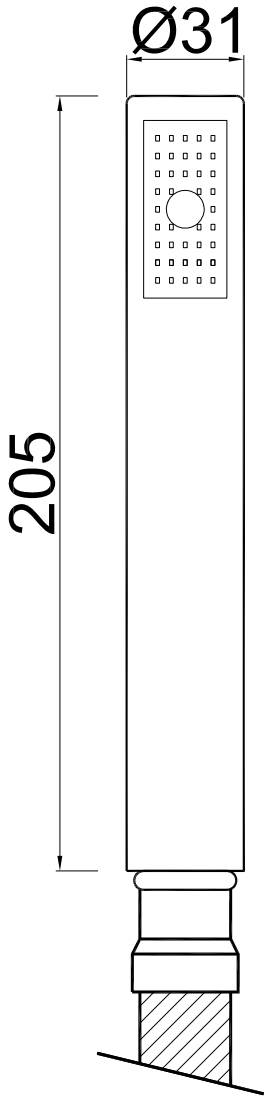
Ø31
205

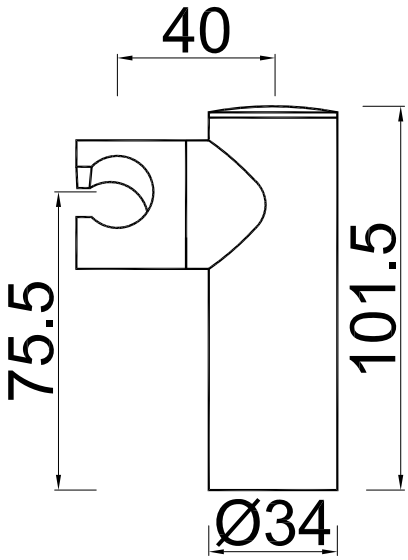
40
75.5
101.5
Ø34