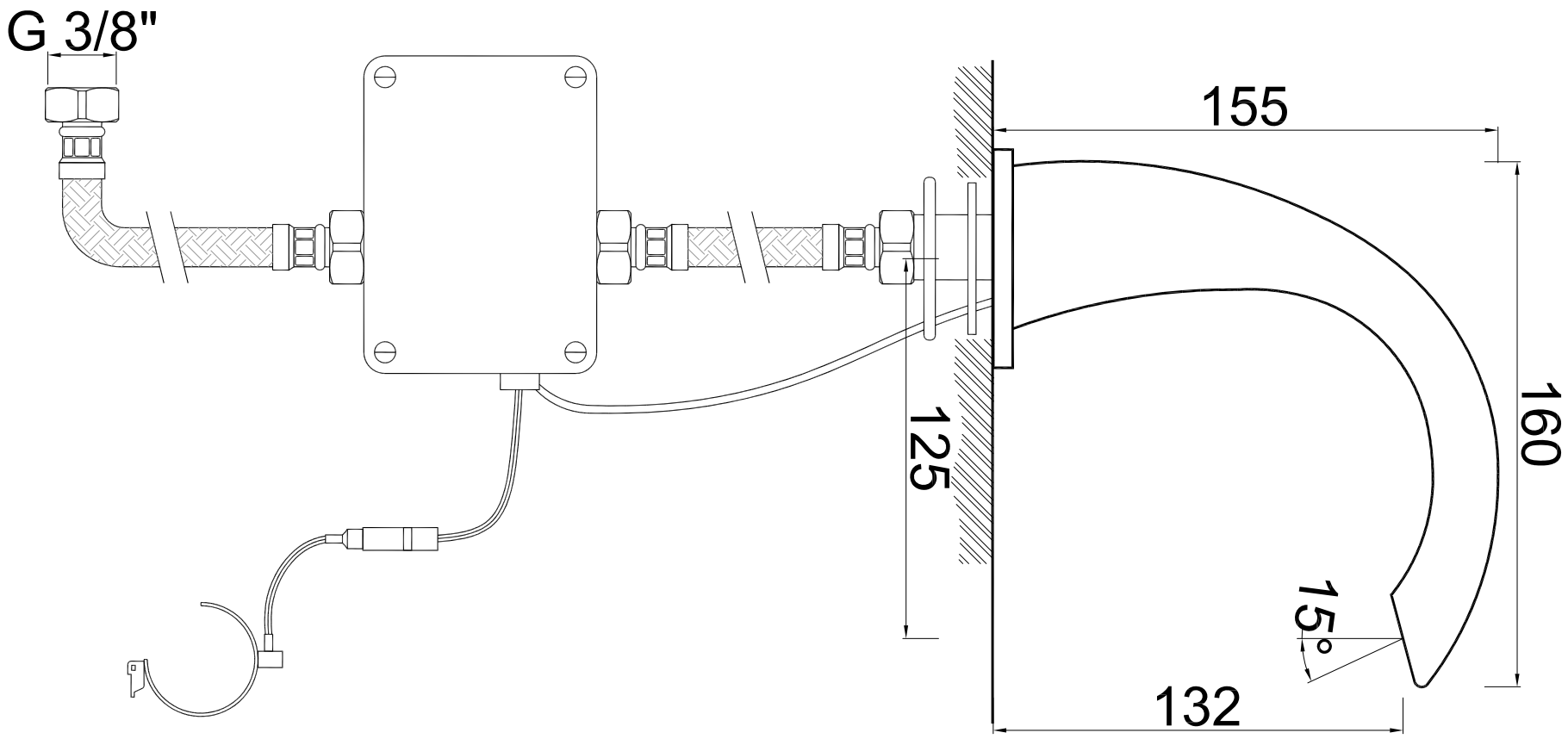
G 3/8"
155
160
125
15°
132